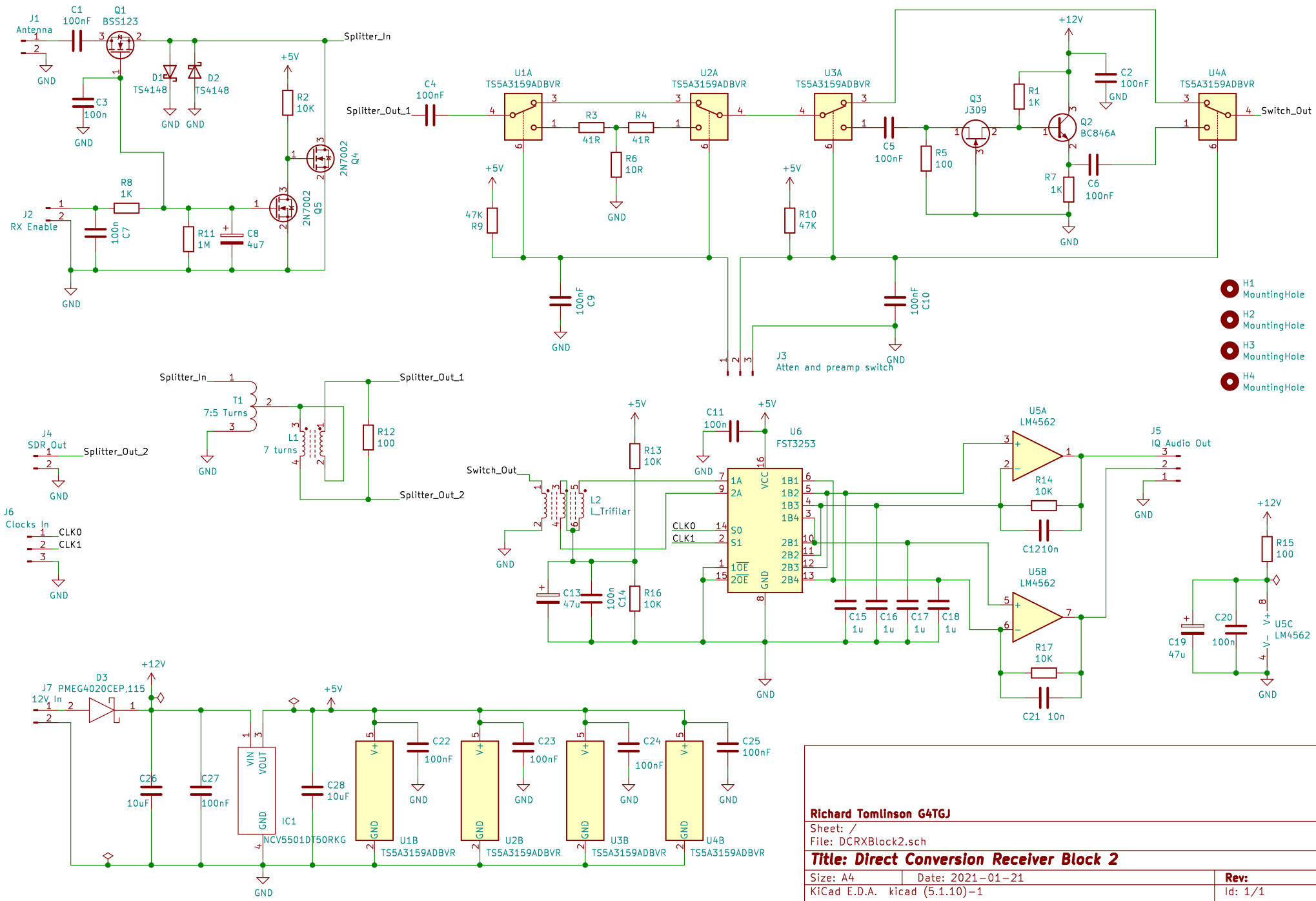

Richard Tomlinson G4TGJ

Sheet: /

File: DCRXBlock2.sch

Title: Direct Conversion Receiver Block 2

Size: A4	Date: 2021-01-21	Rev:
KiCad E.D.A. kicad (5.1.10)-1		Id: 1/1